Engineering Release Notice (ERN)	Location	Change Description	A = Added D = Deleted	W = Was	Document Release Status **RELEASED**	
					Date	Modification Count

The copying, distribution and utilization of this document as well as the communication of its contents to others without expressed authorization is prohibited. Offenders will be held liable for payment of damages. All rights reserved in the event of the grant of a patent, utility model or ornamental design registration.

Document Title

WIRING DIAGRAM

HDE13 OBD13 VBC

VOLVO

Group Trucks Technology

Document Type

PRODUCT SCHEMATICS

Owner Domain:Document Prefix

Document No	Issue Index	Volume No	Page No
21677040	**04**	**01**	**1(6)**

EDM-W 2000-04-01

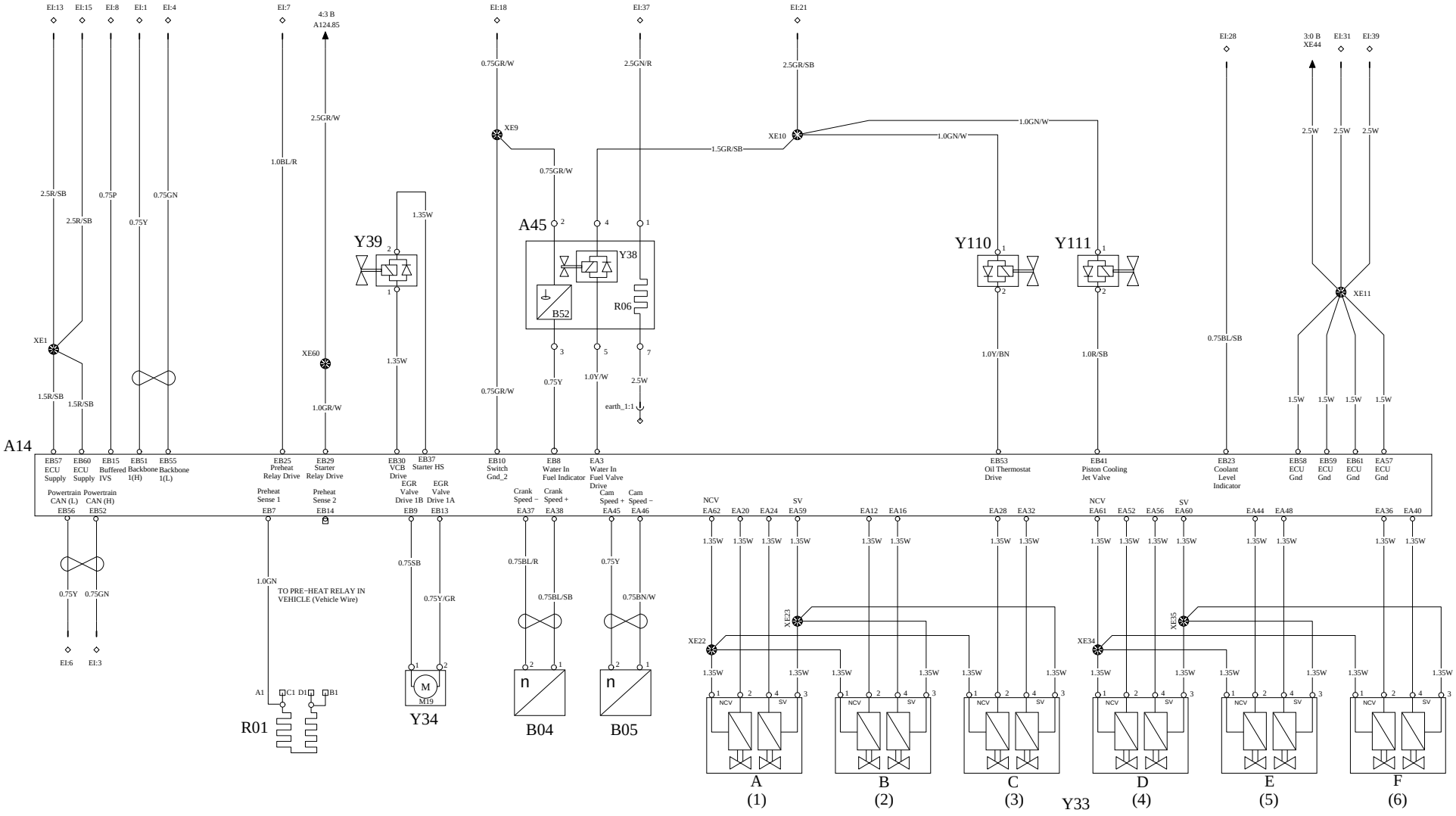

VOLVO Group Trucks Technology	Document title: WIRING DIAGRAM	Document No	Issue	Volume	Page
	Document type: INSTALLATION REQUIREMENT	21677040	04	01	2(6)

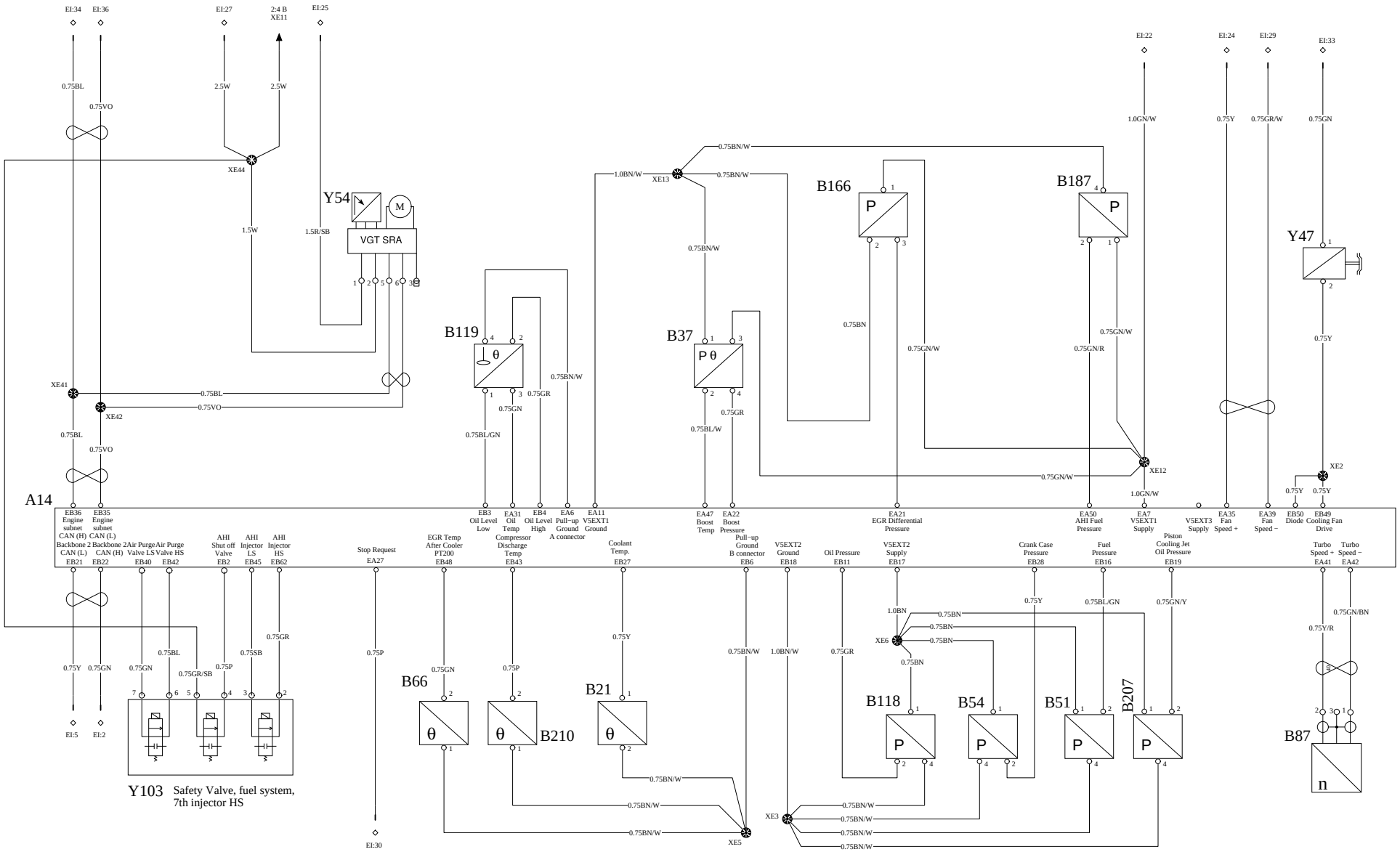

VOLVO Group Trucks Technology	Document title: WIRING DIAGRAM	Document No	Issue	Volume	Page
	Document type: INSTALLATION REQUIREMENT	21677040	04	01	3(6)

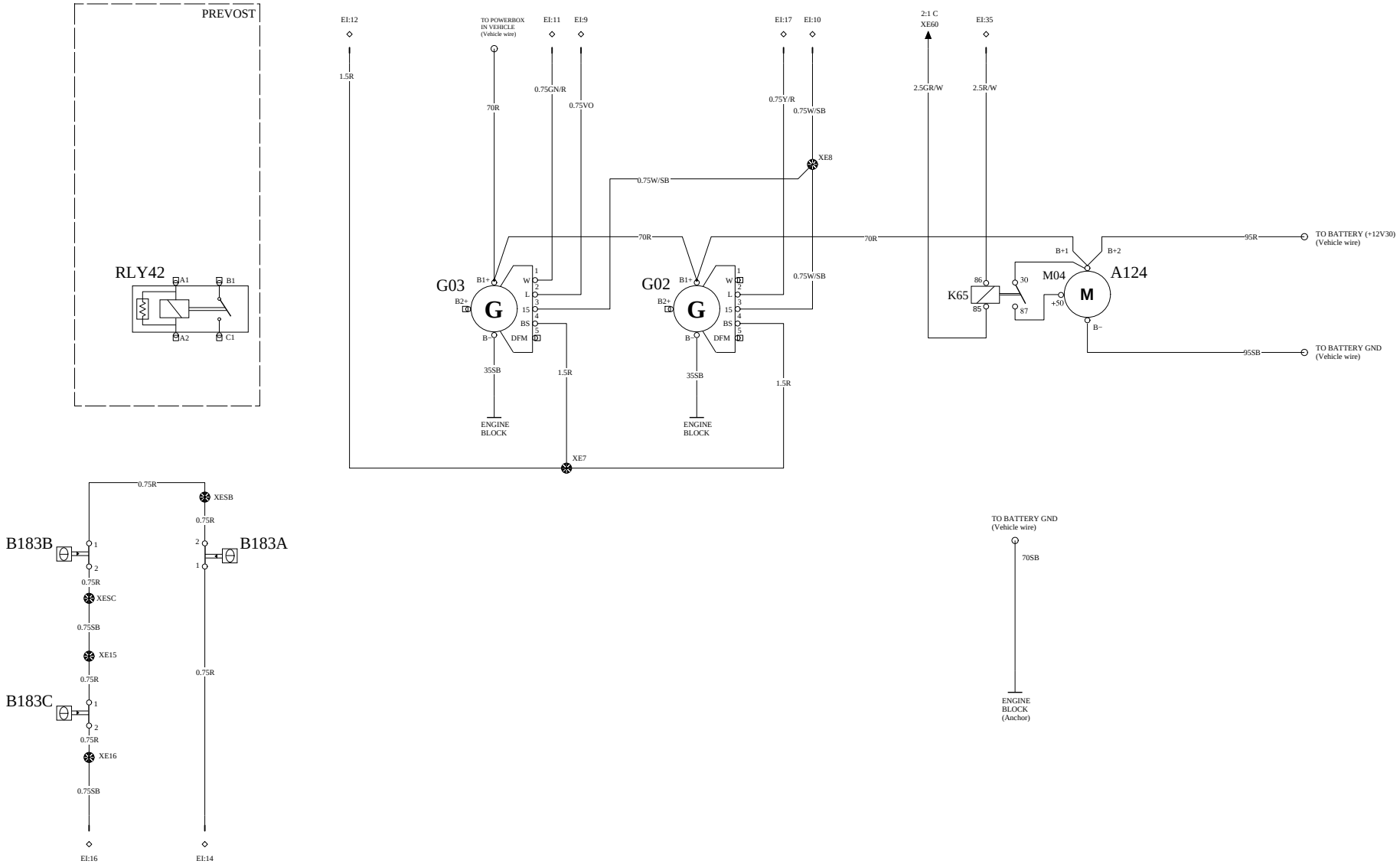

VOLVO Group Trucks Technology	Document title: WIRING DIAGRAM	Document No	Issue	Volume	Page
	Document type: INSTALLATION REQUIREMENT	21677040	04	01	4(6)

Symbol	Description
A14	Control unit, EMS (Engine Management System)
A45	Fuel conditioner (Incl. R06, B52, Y38)
A124	Comp. group starter motor. (Inc. M04, K65)
B04	Sensor, engine speed, crankshaft
B05	Sensor, engine speed, camshaft
B21	Sensor, coolant temperature, engine
B37	Sensor, boost temperature and boost pressure
B51	Sensor, fuel pressure
B52	Sensor, water level in fuel pre filter (Included in A45)
B54	Sensor, crank case pressure
B66	Sensor, EGR temperature after cooler
B87	Sensor, turbo speed
B118	Sensor, oil pressure
B119	Sensor, oil level and oil temp
B166	Sensor, EGR Differential pressure
B183	Sensor, Fire Warning
B187	Sensor, after treatment fuel pressure
B207	Sensor, oil cooling jet pressure
B210	Sensor, compressor discharge temp
G02	Alternator
G03	Inverter
K65	Starter motor relay (Included in A124)
M04	Starter motor (Included in A124)
M19	Motor, EGR control valve (Included in Y34)
R01	Heater, engine preheat
R06	Heater, fuel pre filter (Included in A45)
Y33	Solenoid valves UI (Unit Injector)
Y34	Solenoid valve, EGR system (Incl. M19)
Y38	Solenoid valve, Water in fuel indicator
Y39	Solenoid valve, VCB (Volvo Compression Brake)
Y47	Solenoid valve, cooling fan hydraulic pump
Y54	Control unit, Volvo geometric turbo, Can based
Y103	Safety Valve, fuel system, ATI
Y110	Solenoid valve, oil thermostat
Y111	Solenoid valve, oil piston cooling jet

Vehicle Interface EI

Pin	Function
EI:1	CAN I (H)
EI:2	J1708 (A)
EI:3	CAN II (H)
EI:4	CAN I (L)
EI:5	J1708 (B)
EI:6	CAN II (L)
EI:7	Preheater Relay Drive
EI:8	IVS
EI:9	Alternator 2 L
EI:10	Alternator 1, Alternator 2 15+
EI:11	Alternator 2 W
EI:12	Alternator 1, Alternator 2 BS
EI:13	Power supply for A14
EI:14	Fire sensor loop
EI:15	Power supply for A14
EI:16	Fire sensor loop
EI:17	Alternator 1 L
EI:18	Switch ground
EI:21	Power supply for Y38, Y110, Y111
EI:22	Power supply for external sensors (+5V)
EI:24	Fan speed sensor, signal
EI:25	Power supply VGT
EI:26	GND for external sensors
EI:27	GND
EI:28	Signal, coolant level
EI:29	Fan speed sensor, ground
EI:30	Stop Request, VBC only
EI:31	GND
EI:33	Power supply hydraulic pump cooling fan
EI:34	Engine Subnet CAN(H)
EI:35	Starter control
EI:36	Engine Subnet CAN(L)
EI:37	Power supply for R06
EI:38	Not used
EI:39	GND

CIC#1, CANIII Interface Connector
CIC1: CANIII (L)
CIC7: CANIII (H)